Standard Features

- ASTM E74 performance: Lower Limit Factor (LLF) better than 0.005 %, Class A better than 2 %, and Class AA better than 10 % of capacity when used only in a single direction.[1]
- ISO 376 Class 00 from 5 % of capacity (Case C only, Case D varies by capacity)
- Compression and/or tension modes
- Capacities from 300–200,000 lbf, or equivalent kgf/Newton
- Calibration to Primary deadweight standards available
- Available accessories such as: Quick-Change Tension Members, custom-cut protective cases, various indicators

1. When the directions are combined, there may be a reduction in the loading range. The reduction varies by capacity, and the verified range of forces could increase to 40 % of capacity.

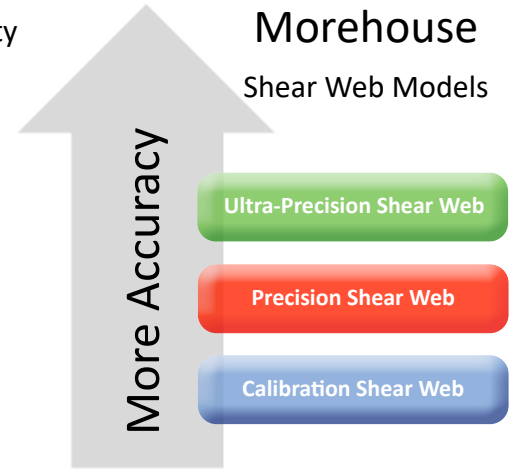

Technical Specifications

Specifications	Model - Capacity (lbf / kN)					
	300-2K / 1-10	5K-10K / 25-50	25K-50K / 100-250	60K / 300	100K / 500	200K / 900
Accuracy						
Static Error Band, % R.O.	±0.02	± 0.03	± 0.03	± 0.03	± 0.05	± 0.05
Non-Linearity, % R.O.	±0.02	± 0.03	± 0.03	± 0.03	± 0.05	± 0.05
Hysteresis, % R.O.	± 0.02	± 0.04	± 0.04	± 0.04	± 0.05	± 0.05
Non-Repeatability, % R.O.	± 0.005	± 0.005	± 0.005	± 0.005	± 0.005	± 0.005
Creep, % Rdg / 20 Min.	± 0.015	± 0.015	± 0.015	± 0.015	± 0.015	± 0.015
Off-Center Load Sensitivity, %/in	±0.1	± 0.1	± 0.1	± 0.1	± 0.1	± 0.1
Side Load Sensitivity, %	± 0.1	± 0.1	± 0.1	± 0.1	± 0.1	± 0.1
Zero Balance, % R.O.	± 1.0	± 1.0	± 1.0	± 1.0	± 1.0	± 1.0
Temperature						
Range, Compensated, °F	+15 to +115	+15 to +115	+15 to +115	+15 to +115	+15 to +115	+15 to +115
Range, Operating, °F	-65 to +200	-65 to +200	-65 to +200	-65 to +200	-65 to +200	-65 to +200
Sensitivity Effect, % Rdg / 100°F	0.08	0.08	0.08	0.08	0.08	0.08
Zero Effect, % R.O. / 100°F	0.08	0.08	0.08	0.08	0.08	0.08
Electrical						
Recommended Excitation, VDC	10	10	10	10	10	10
Input Resistance, Ω	350 +40/-3.5	350 +40/-3.5	350 +40/-3.5	350 +40/-3.5	350 +40/-3.5	350 +40/-3.5
Output Resistance, Ω	350 ± 3.5	350 ± 3.5	350 ± 3.5	350 ± 3.5	350 ± 3.5	350 ± 3.5
Sensitivity (R.O.), mV/V, Nominal	2	4	4	4	4	4
Insulation Bridge/Case, MegΩ	5000 @50 VDC	5000 @50 VDC	5000 @50 VDC	5000 @50 VDC	5000 @50 VDC	5000 @50 VDC
Mechanical						
Safe Overload, % R.O.	150	150	150	150	150	150
Weight, lbs	3.8	8.0	23.5	26.0	58.0	171.0
Flexure Material	Aluminum	Steel	Steel	Steel	Steel	Steel

Capacity (lbf)	**300**	**500**	**1,000**	**2,000**	**5,000**	**10,000**	**25,000**	**30,000**	**50,000**	**60,000**	**100,000**	**200,000**
Capacity (kN)	**1**	**2.5**	**5**	**10**	**25**	**50**	**100**	**125**	**250**	**300**	**500**	**900**
Part No.	UPC-300	UPC-500	UPC-1k	UPC-2k	UPC-5k	UPC-10k	UPC-25k	UPC-30k	UPC-50k	UPC-60k	UPC-100k	UPC-200k

Load cells for other capacities are available. Contact Morehouse for more information.

Dimensions

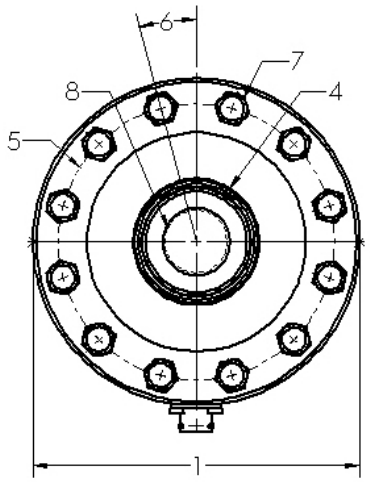

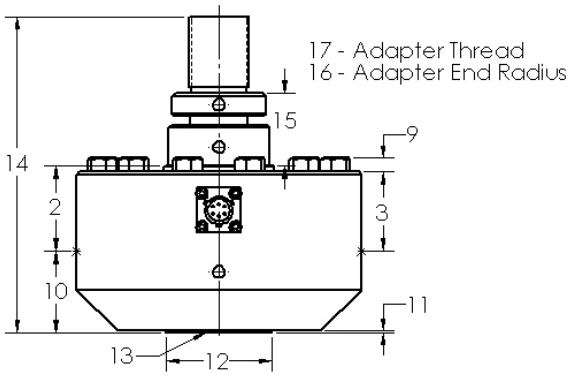

Dimensions	Model - Capacity (lbf / kN)					
	300-2K / 1-10	5K-10K / 20-50	25K-50K /100-250	60K / 300	100K / 500	200K / 900
1 – Cell & Base Diameter (in/mm)	4.12 / 104.65	4.12 / 104.65	6.06 / 153.92	6.06 / 153.92	8.00 / 203.20	11.00 / 279.0
2 – Cell Height to Hub (in/mm)	1.38 / 35.05	1.38 / 35.05	1.75 / 44.45	2.28 / 57.91	2.50 / 63.50	3.50 / 88.90
3 – Cell Body Height (in/mm)	1.25 / 31.75	1.25 / 31.75	1.63 / 41.40	2.02 / 51.30	2.25 / 57.15	3.00 / 76.20
4 – Hub Diameter (in/mm)	1.29 / 32.77	1.29 / 32.77	2.34-2.58 /59.44-65.53	2.65 / 67.31	3.76 / 95.50	4.81 / 122.17
5 – Mounting B.C. Diameter (in/mm)	3.50 / 88.90	3.50 / 88.90	5.13 / 130.30	5.13 / 130.30	6.50 / 165.10	9.00 / 228.60
6 – Symmetric B.C. Offset	22.5 Degrees	22.5 Degrees	15 Degrees	15 Degrees	11.25 Degrees	11.25 Degrees
7 – Mounting Hole Diameter (in/mm)	0.28 / 7.11	0.28 / 7.11	0.41 / 10.41	0.41 / 10.41	0.53 / 13.46	0.78 / 19.81
8 – Hub Thread Size, Depth (in-TPI)	0.625”-18, UNF-3B	0.625”-18, UNF-3B	1.25”-12, UNF-3B	1.50 ”- 12, UNF-3B	1.75”-12, UNF-3B	2.75”-8, UNF-3B
9 – Bolt Head Protrusion (in/mm)	0.20 / 5.08	0.20 / 5.08	0.30 / 7.62	0.30 / 7.62	0.40 / 10.16	0.60 / 15.24
10 – Base Thickness, Total (in/mm)	1.13 / 28.70	1.13 / 28.70	1.75 / 44.45	2.00 / 50.80	2.00 / 50.80	3.00 / 76.20
11 – Base Step Height (in/mm)	0.03 / 0.76	0.03 / 0.76	0.03 / 0.76	0.03 / 0.76	0.03 / 0.76	0.03 / 0.76
12 – Base Step Diameter (in/mm)	1.25 / 31.75	1.25 / 31.75	2.25 / 57.15	2.75 / 69.85	3.00 / 76.20	4.50 / 114.3
13 – Base Thread Size, Depth (in-TPI)	0.625”-18, UNF-3B	0.625”-18, UNF-3B	1.25”-12, UNF-3B	1.50 ”- 12, UNF-3B	1.75”-12, UNF-3B	2.75”-8, UNF-3B
14 – Total Height (in/mm)	4.38 / 111.3	4.38 / 111.3	6.50 / 162.1	7.38 / 187.45	8.75 / 218.9	10.50 / 266.7
15 – Adapter Thread Length (in/mm)	0.75 / 19.05	0.75 / 19.05	1.50 / 38.10	1.65 / 41.91	1.75 / 44.45	2.75 / 69.85
16 – Adapter End Radius (in/mm)	6.00 / 152.40	6.00 / 152.40	6.00 / 152.40	6.00 / 152.40	12.00 / 304.80	18.00 / 457.0
17 – Adapter Thread Size (in-TPI)	0.625”-18	0.625”-18	1.25”-12	1.50 ”- 12	1.75”-12	2.75”-8

Wiring
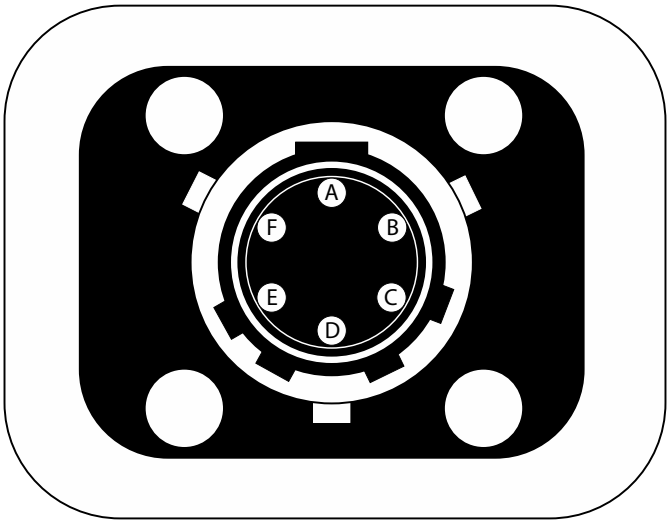
Ultra Precision Shear Web	
Connector Pin	Description
Pin A	Excitation +
Pin B	Signal +
Pin C	Signal -
Pin D	Excitation -