PM-5201
Rev. 03/2024

ISO/IEC 17025 / ANSI/NCSLI Z540.3 Accredited

Operation and Instruction Manual

Universal Calibrating Machine (UCM)

Morehouse Instrument Company, Inc.
1742 Sixth Ave., York, PA 17403-2675 USA

P: (717) 843-0081
F: (717) 846-4193

info@mhforce.com
www.mhforce.com

Table of Contents

Table of Contents

1. Introduction

1.1 Origin and Use

Morehouse Universal Calibrating Machines were originally developed to use the high accuracy of Morehouse Proving Rings to calibrate working load cells. Today, calibrating machines are used in industrial, government, and military laboratories to calibrate load cells, force transducers, dynamometers, load rings, force links, and other force measurement devices.

1.2 Functional Operation

The Morehouse Universal Calibrating Machine is a device for simultaneously applying a force to a reference standard and the device to be calibrated (unit under test). The force is produced by a hydraulic jack activated by a manually operated pump, specially designed as a force machine with low errors. The calibrating machine is used to calibrate compression-type and tension-type instruments. The calibration reference standard is always loaded in compression, even when calibrating an instrument in tension.

Figure 1: Morehouse Universal Calibrating Machine 1,000,000 lbf Capacity

1.3 Design

The design of the machine has one purpose: low uncertainty. The force the calibrating machine produces is transferred directly to the unit under test without any machine loss or mechanical interference. Friction between the reference standard and the unit under test has been eliminated. This is essential because even slight friction, which is inherent in other types of calibrating machines, frequently results in gross errors. Non-axial loading, another potential error source, is eliminated by the design of the machine and its accessories.

1.4 Reference Standard

While a reference standard, such as a load cell, is essential to calibration, it is not supplied as part of the Universal Calibrating Machine. The reference standard is always loaded in compression whether performing a tension or compression calibration.

Figure 2: Morehouse Ultra-Precision Load Cell

1.5 Overview

This manual contains instructions for the installation, operation, service, and routine maintenance of all Morehouse Universal Calibrating Machines, regardless of capacity. If there are any questions about the use or maintenance of the calibrating machine, please contact us at info@mhforce.com.

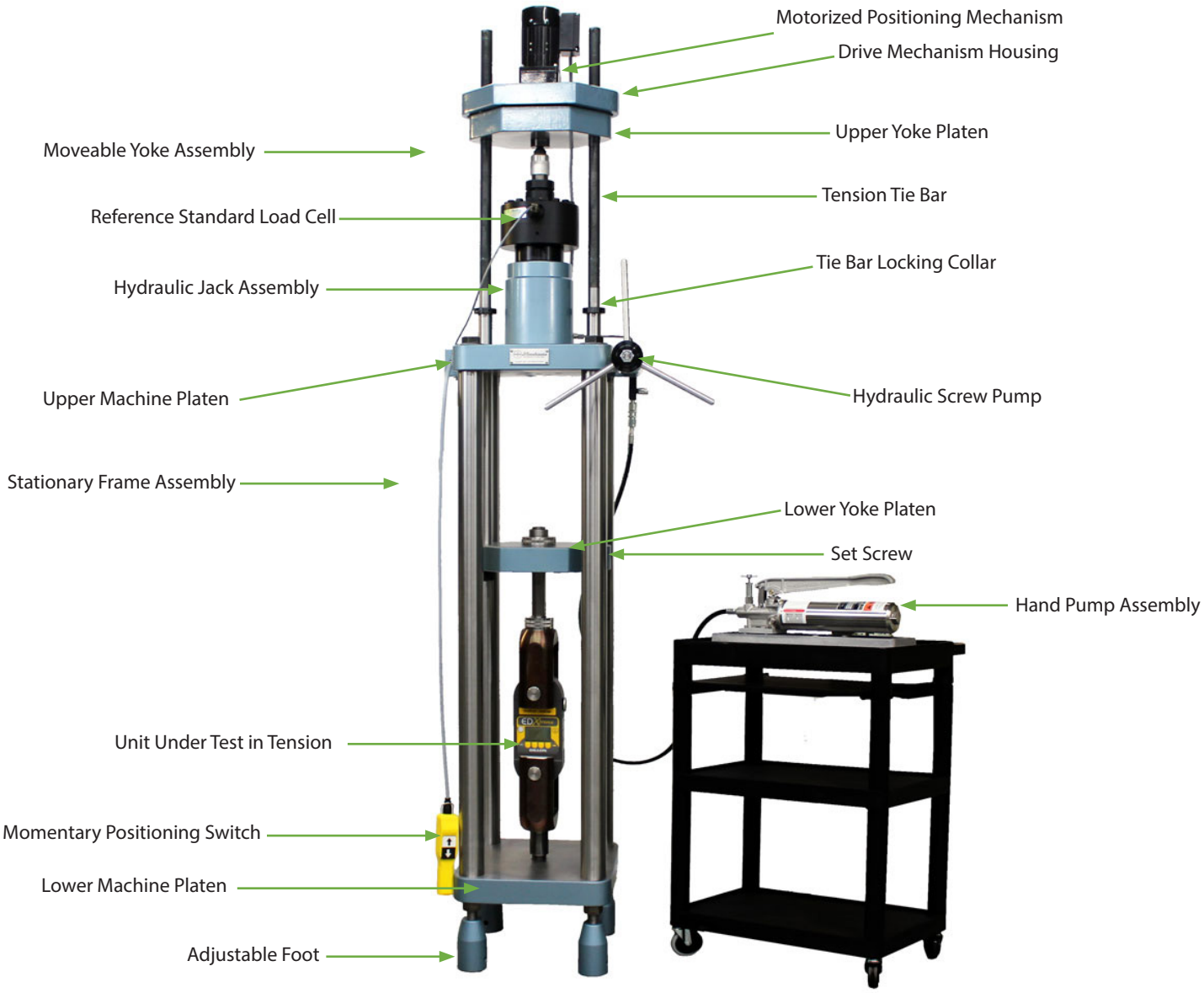

Figure 3: Morehouse Universal Calibrating Machine 100,000 lbf (500 kN) Capacity (with motorized adjustable yoke platen)

2. Description

2.1 General

The Morehouse Universal Calibrating Machine is comprised of three principal assemblies:
2.3 - Load Bearing Frames
2.4 - Hydraulic Jack
2.5 - Loading Power Supply

2.2 Construction

The outline drawing in Figure 4 illustrates the overall construction of the calibrating machine. Dimensions are indicated for the various standard capacity machines in Tables 1 and 2. The machine is built to be plumb, level, square, rigid, and have low torsion.

Technical Specifications

Capacity required (lbf)	Order code	Max capacity (lbf)	A	L Max[1]	L Min[1]	M Max[1]	M Min[1]	Size
10,000	UCM-10K STD	11,500	TBD	TBD	TBD	TBD	TBD	Standard
10,000	UCM-10K Compact	11,500	48.0	13.5	2.0	12.5	1.5	Compact
30,000	UCM-30K STD	30,000	96.0	22.0	3.0	43.5	24.5	Standard
30,000	UCM-30K Compact	30,000	75.0	22.0	3.0	22.5	3.0	Compact
60,000	UCM-60K STD	60,000	105.0	22.5	3.0	46.0	26.5	Standard
60,000	UCM-60K Compact	60,000	81.0	23.5	3.0	22.5	2.0	Compact
100,000	UCM-100K STD	112,500	112.5	24.0	3.0	46.5	25.5	Standard
100,000	UCM-100K Compact	112,500	92.0	24.5	3.0	26.5	5.0	Compact
200,000	UCM-200K STD	225,000	120.0	28.5	7.0	36.5	14.5	Standard
300,000	UCM-300K STD	338,000	132.0	29.5	8.0	41.5	19.5	Standard
500,000	UCM-500K STD	675,000	158.0	34.5	10.0	50.5	26.0	Standard
600,000	UCM-600K STD	675,000	158.0	34.5	10.0	50.5	26.0	Standard
1,000,000	UCM-1000K STD	1,125,000	192.5	40.0	11.0	54.0	25.0	Standard

Table 1: UCM lbf Dimensions (inches)

Capacity required (kN)	Order code	Max capacity (kN)	A	L Max[1]	L Min[1]	M Max[1]	M Min[1]	Size
50	UCM-50 kN STD	50	TBD	TBD	TBD	TBD	TBD	Standard
50	UCM-50 kN Compact	50	1 219	343	51	318	38	Compact
100	UCM-100 kN STD	133	2 438	559	76	1 105	622	Standard
100	UCM-100 kN Compact	133	1 905	559	76	572	76	Compact
250	UCM-250 kN STD	266	2 667	572	76	1 168	673	Standard
250	UCM-250 kN Compact	266	2 057	597	76	572	51	Compact
500	UCM-500 kN STD	500	2 858	610	76	1 181	648	Standard
500	UCM-500 kN Compact	500	2 337	622	76	673	127	Compact
1 000	UCM-1000 kN STD	1 000	3 048	724	178	927	368	Standard
1 500	UCM-1500 kN STD	1 500	3 353	749	203	1 054	495	Standard
3 000	UCM-3000 kN STD	3 000	4 013	876	254	1 283	660	Standard
5 000	UCM-5000 kN STD	5 000	4 013	876	254	1 283	660	Standard

Table 2: UCM kN Dimensions (mm)

[1] Referenced dimensions are configured with the use of Morehouse load cells as the standards.

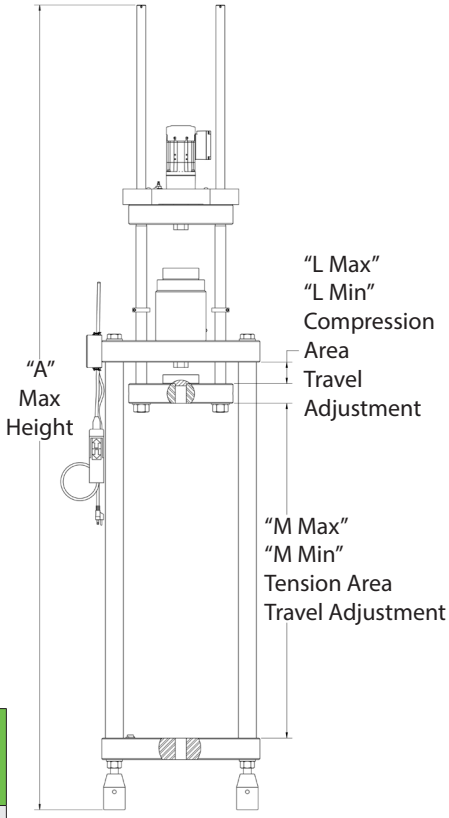

Figure 4: UCM Dimensions

2.3 Load Bearing Frames

The Universal Calibrating Machine consists primarily of two load-bearing frames:

Moveable Yoke Assembly

Two tension tie bars connect the upper and lower yoke platens. The lower yoke platen is permanently fixed in position by means of the set screws and tension collar nuts. An aperture in the center of the lower yoke platen allows the insertion of either an alignment adapter or a tension member (pulling rod). When positioning the moveable yoke assembly, the tie bar locking collars are used to support it on the upper machine platen. The upper yoke is adjustable to accommodate various calibration configurations and minimize necessary jack travel. A motorized positioning mechanism for the upper yoke is standard on all capacity Universal Calibrating Machines.

Stationary Frame Assembly

The stationary frame assembly consists chiefly of two platens connected by tie bars. Adjustable feet and a circular level mounted on the lower machine platen provide the means for leveling the machine. The construction of the stationary frame assembly ensures extremely rigid support with negligible machine deflection, even at capacity load.

2.4 Hydraulic Jack Assembly

The Morehouse hydraulic jack assembly (Figure 5) is specially designed and constructed to be suitable to perform precise calibration work. The jack is attached to the top of the upper machine platen to maintain the vertical axis of the jack precisely in line with that of the reference standard and unit under test. The ram travel of this jack is 1” (25.4 mm) maximum. Hydraulic pressure at capacity load is approximately 4,500 psi (31 026 kPa).

2.5 Hydraulic Pumps

A hydraulic pump is required to supply, maintain, and adjust the hydraulic fluid pressure in a UCM hydraulic jack in order to provide various calibration loads. Morehouse provides three optional hydraulic pumps for all UCM models based on the needs and conditions provided by the user:
1- Hydraulic Hand Pump
2- Universal Hydraulic Pump (UHP)
3- Auxiliary Hydraulic Screw Pump

Hydraulic Hand Pump

A Morehouse hand pump is a basic and low-cost system for providing hydraulic pressure for a UCM (Figure 5). When this system is purchased with a UCM, the hydraulic jack is activated by a hand pump assembly that advances the ram quickly and then more slowly until the desired load is achieved. The high/low operation is switched manually and can be switched at any desired load. The pump is connected to the hydraulic jack using a hydraulic hose assembly with a quick-disconnect coupling.

Caution: Before use, check the hose and fittings for any potential leaks.

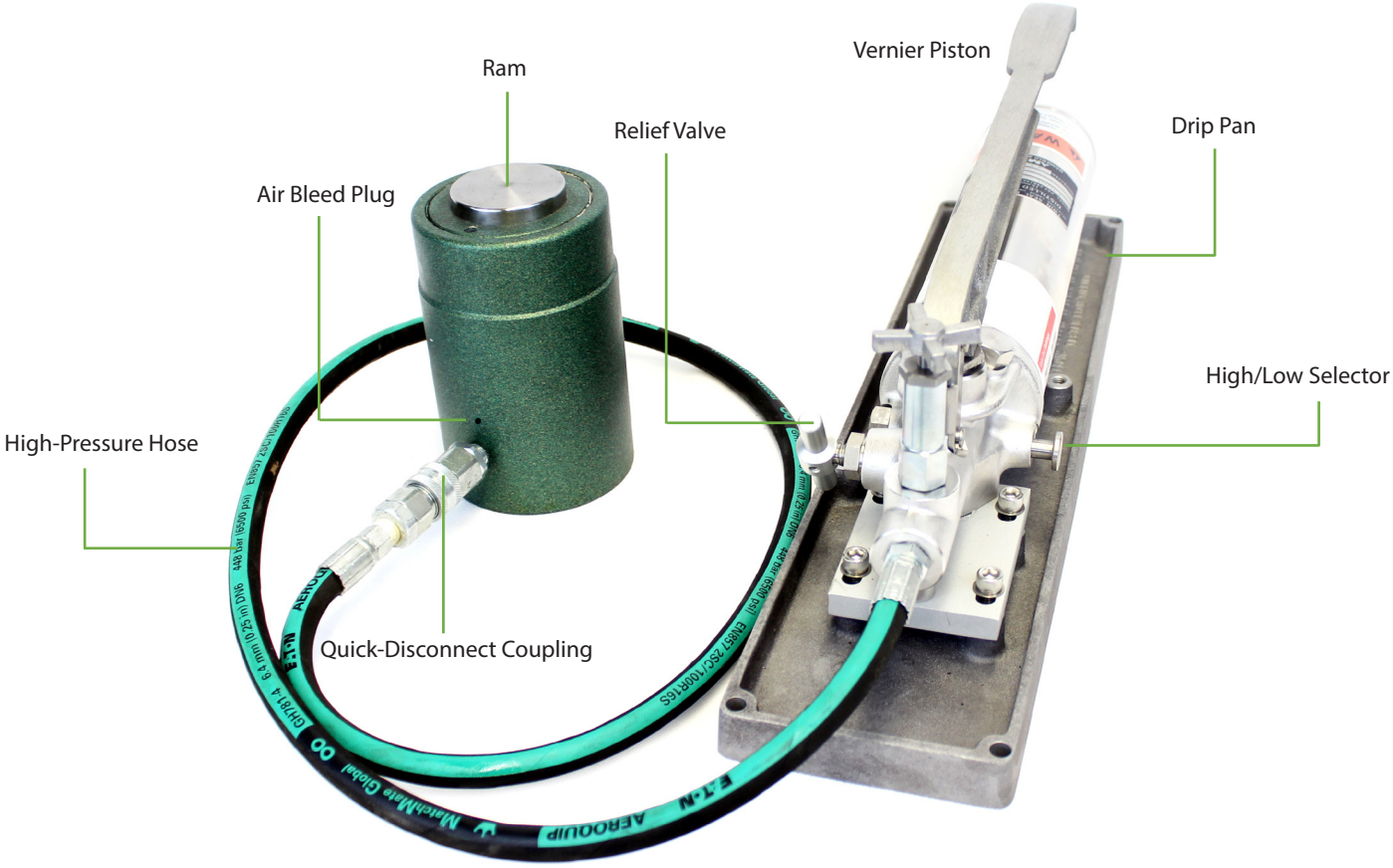

Figure 5: Hydraulic Hand Pump Assembly Connected to Jack Assembly

For more details see the Hydraulic Hand Pump & Jack PM-5250.

Universal Hydraulic Pump (UHP)

The Morehouse Universal Hydraulic Pump (UHP) is comprised of an electric motor-driven pump that eliminates the effort required to operate the hand pump. It is recommended for use with calibrating machines of 60,000 lbf (250 kN) and higher capacities. Morehouse adjusts the hydraulic fluid flow for UHP units based on the capacity and size of the machine. The operator uses the momentary switch in front of the unit to activate the electric motor and run the hydraulic pump. A hydraulic hose assembly connects the Universal Hydraulic Pump (UHP) to the hydraulic jack.

Figure 6: Morehouse Universal Hydraulic Pump

For more details see the Universal Hydraulic Pump PM-5251.

Auxiliary Hydraulic Screw Pump

The Morehouse Auxiliary Hydraulic Screw Pump is a manual hydraulic pump that is specifically designed to adjust and maintain the calibration force in a UCM at a fine level. This gives the operator better control over the calibration force and enables accurate calibration at any desired force.

For UCMs with the Universal Hydraulic Pump, it is mounted on the body of the Universal Hydraulic Pump unit for easier handling. For UCMs with the hydraulic hand pump, it is an option that can be installed directly on the UCM frame.

(a)

(b)

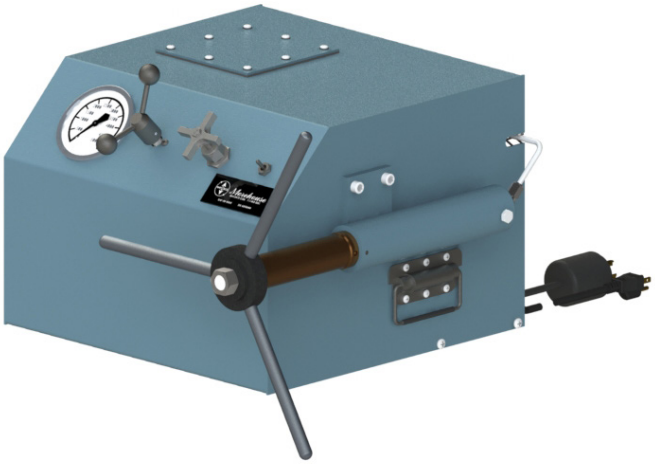

**Figure 7: Auxiliary Hydraulic Screw Pump Mounted on:
a) UCM Frame; b) Universal Hydraulic Pump**

For more details see the Auxiliary Hydraulic Screw Pump Instruction Manual PM-5252.

3. Preparation for Use

3.1 Unpacking

Go to https://bit.ly/3pzWeAW and watch a video on how to unpack the machine.

Each Universal Calibrating Machine is assembled and tested at the factory prior to shipment. The calibrating machine is packed completely and assembled as a unit in a single crate. The lower yoke platen is bolted to the lower machine platen to form a rigid assembly for shipment, and the hand pump assembly is disconnected from the jack and attached separately to the shipping crate.

The uncrating procedure is straightforward. With the crate in a horizontal position, remove the packing material from the crate, being careful to check for small parts and accessories that may be packed with the calibrating machine, including the hydraulic hose.

Caution: Before lifting, ensure the unit does not exceed the capacity of the lifting equipment.

3.2 Machine Installation

Select a location for the machine where the variation in ambient temperature is minimized to facilitate proper calibration. Set the machine in place on a flat surface, and level the machine by adjusting the feet using the circular level supplied with the machine.

The 10,000 lbf (50 kN) capacity machine is normally placed on a bench or sturdy table. Larger machines are usually installed adjacent to a bench or other suitable work surface to which the hand pump can be fastened.

After the machine has been installed, remove the bolt that holds the lower yoke to the lower machine platen.

3.3 Installation of a Reference Standard

A reference standard, normally a load cell, must be installed in a UCM before using the machine. The reference standard measures the applied force and calibrates the unit under test.

A Morehouse reference standard kit can be utilized to install the reference standard into a UCM. This kit consists of Morehouse reference standards, which are typically load cells and the adapters necessary to ensure proper force application. The kit shown in Figure 8 is typically used for force standards with capacities of 100,000 lbf (500 kN) and lower. This kit contains:

1- Ball Seat Adapter
2- Load Ball Adapter
3- Reference Standard Load Cell
4- Alignment Plug
5- Jack Compression Block

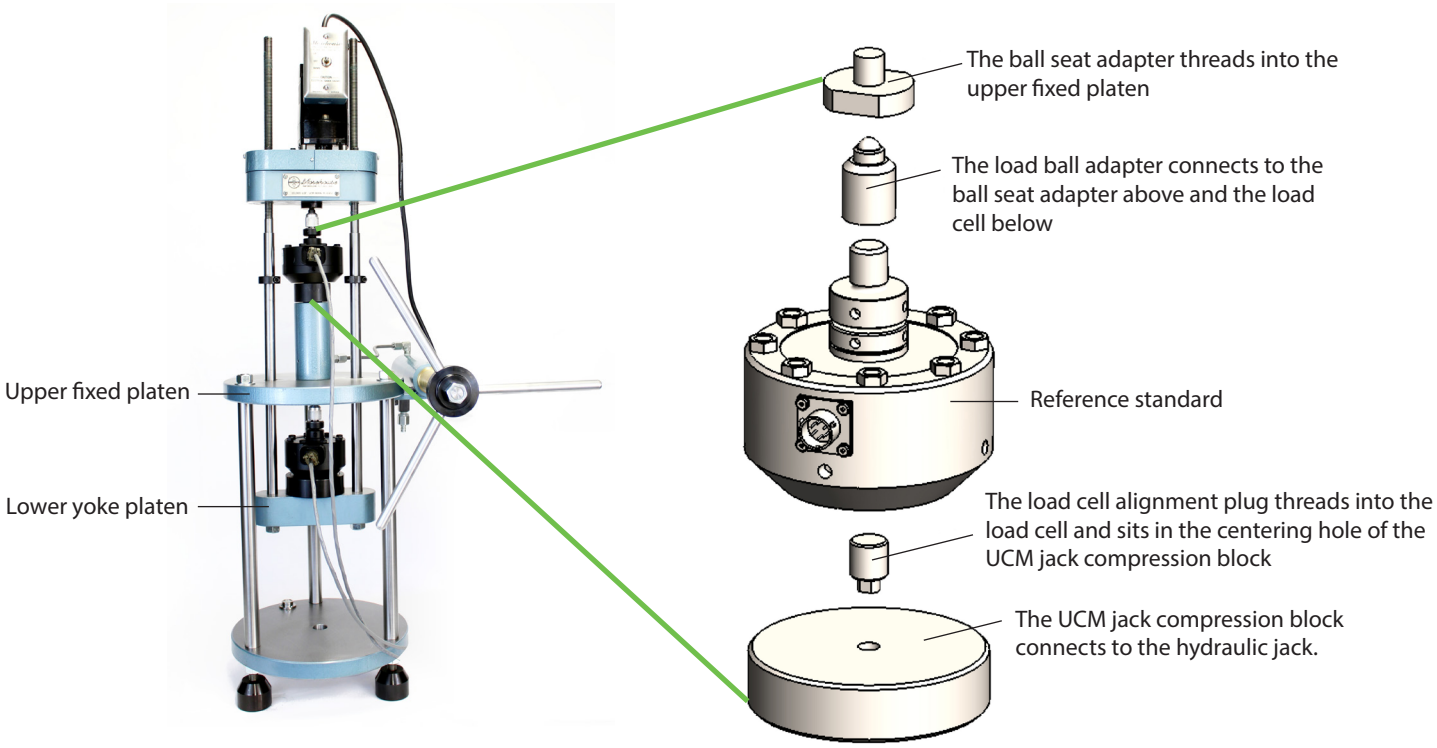

Figure 8: Reference Standard Kit for Capacities 100,000 lbf (500 kN) and Lower

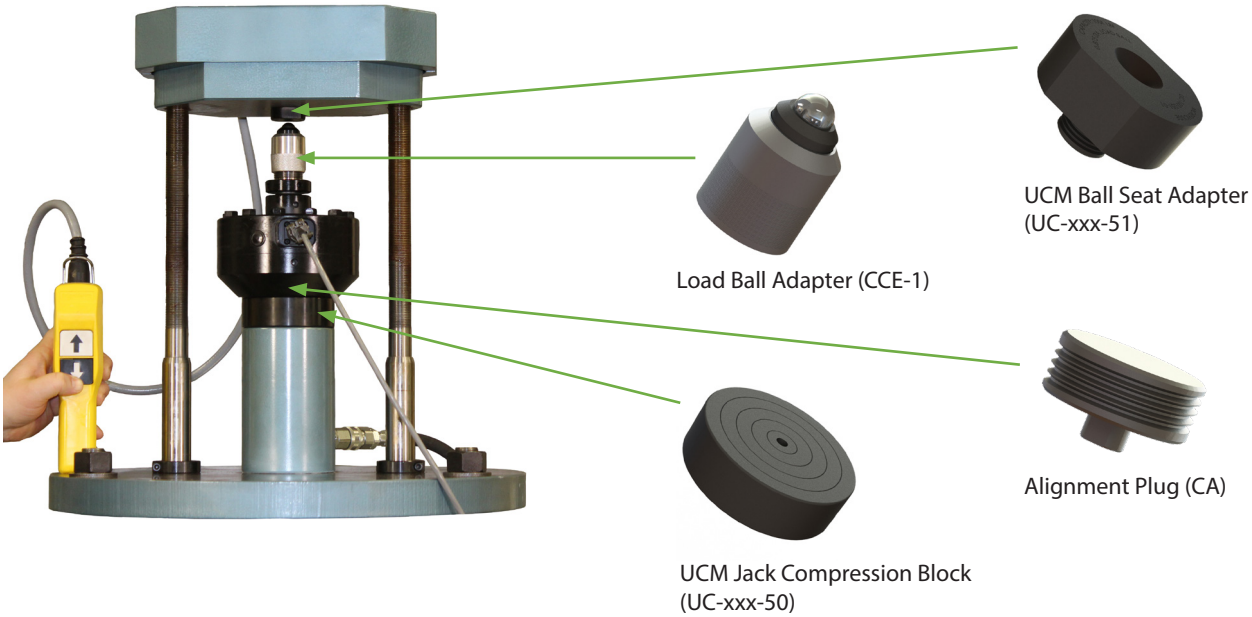

Figure 9: Reference Standard Setup and Adapters

If the capacity of the reference standard load cell is higher than 100,000 lbf (500 kN), then the kit shown in Figure 10 can be used to install the standard in a UCM. The kit contains the following:

1- Top Block Compression Adapter
2- Reference Load Cell
3- Load Cell Alignment Plug
4- Jack Compression Block

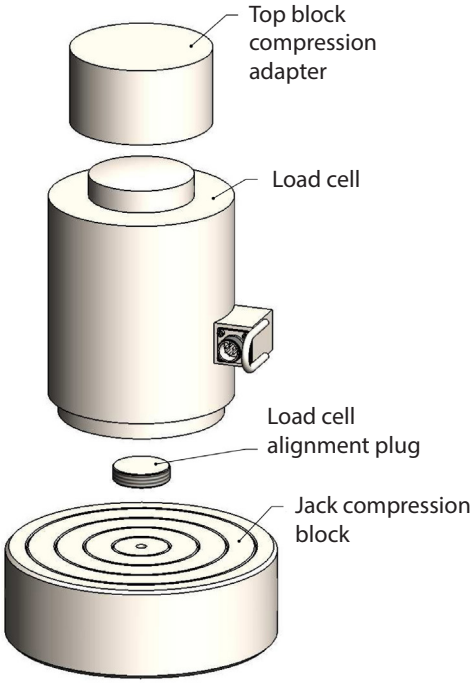

Figure 10: Reference Standard Kit for Capacities Higher than 100,000 lbf (500 kN)

For more details see the Universal Calibrating Machine Adapters and Accessories PG-5202.

Verify that the upper yoke platen is positioned so that there is sufficient space between the hydraulic jack and the upper machine platen to insert the reference standard with several inches of thread on the yoke tie bars remaining above the upper yoke platen. Be sure to include an allowance for the height of any accessories or adapters to be used with the reference standard.

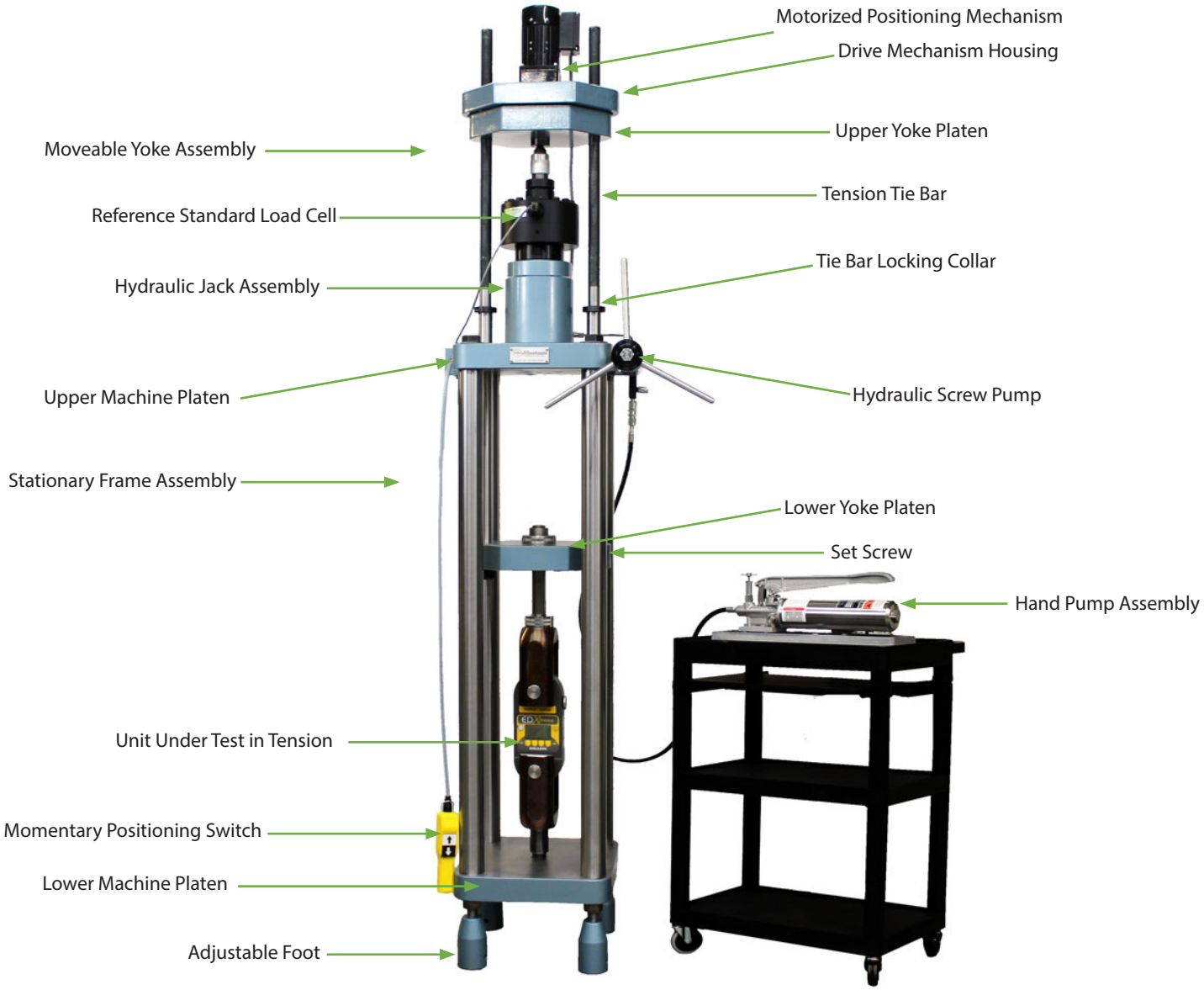

Figure 11: Morehouse Universal Calibrating Machine 100,000 lbf (500 kN) Capacity (with motorized adjustable yoke platen)

Watch the video How to setup a load cell reference standard in a UCM to learn more.

If sufficient space cannot be obtained, then adjust the upper yoke platen as follows:

Note: When adjusting the upper yoke platen, be careful not to run it against the shoulders or the stops on the tension tie bars, as this may damage the calibrating machine.

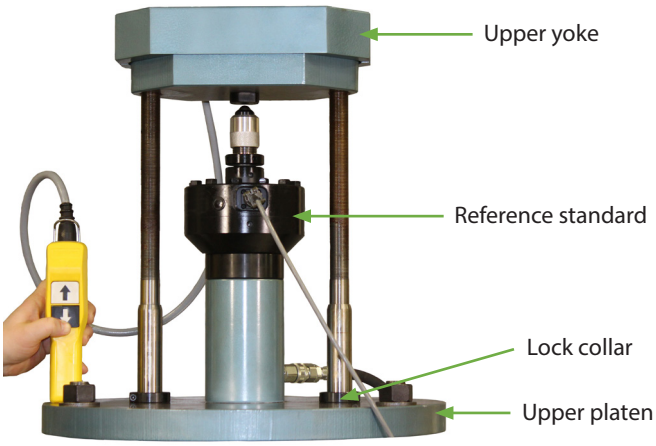

Figure 12: Reference Standard Setup

a) Lower the upper yoke platen using the motor control until it rests on the hydraulic jack.

b) Continue to operate the yoke adjusting mechanism until the lower surface of the upper yoke platen is within 1/8 inch of the shoulders of the tension tie bars.

c) Loosen the screws on the tie bar locking collars, lower the locking collars onto the upper machine platen, and tighten the screws firmly.

d) By means of the motor control, raise the upper yoke platen sufficiently to accommodate the reference standard plus any accessories or adapters that will be used with it.

Note: Be careful not to run the upper yoke platen against the stops near the end of the tension tie bar threads, as this may damage the calibrating machine.

Once the yoke has been positioned to accommodate the reference standard, place it on the hydraulic jack's ram. If the reference standard is a load cell, it is advisable to use an alignment plug to properly align and secure it on the UCM jack compression block.

For more details see Compression and Tension Adapters PG-5943 for a complete list of adapters that can be used with a Universal Calibrating Machine.

If the reference standard is a proving ring, an adapter should be used to properly align and secure the reference standard (Figure 13, A) on the jack ram (Figure 13, C).

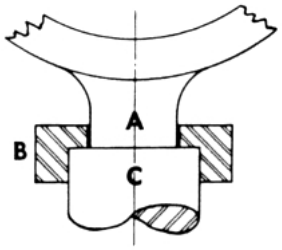

Figure 13: Proving Ring Adapters
A) Lower Boss of Reference Standard
B) Ring Alignment Bushing
C) Jack Ram

Next, as shown in Figure 14, place a hardened alloy steel loading ball (B) of the proper size and load rating in the ball seat of the reference standard (C) and lower the upper yoke platen (A) until the ball seat of the platen rests on the ball.

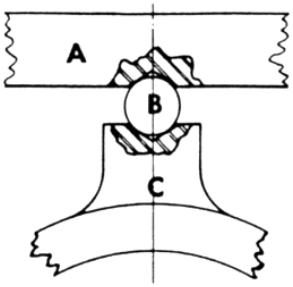

Figure 14:
A) Upper Yoke Platen
B) Hardened Steel Alloy Load Ball
C) Jack Ram Upper Boss of Reference Standard

If the reference standard is not provided with a ball seat, a suitable adapter should be used. Do not confuse a lathe center, often found on instruments, with properly machined ball seats.

Note: Do not interchange hardened alloy steel loading balls or retainer clips with hardened alloy steel loading balls between different reference standards. They should be matched with a reference standard and used only with that standard.

When the reference standard does not have a ball seat, proper axial alignment is difficult to achieve without the proper accessories and adapters. To maintain proper axial alignment, it is recommended that a reference standard with a ball and ball cup be used whenever possible.

When the reference standard is in place, and the upper yoke platen is lowered to rest on the steel loading ball (or another adapter), release the lock collars. Measure the distance between the upper machine platen and the lower yoke platen. This distance should be approximately the height of the unit under test plus any accessories or adapters to be used. If it is not, then raise or lower the lower yoke platen until the correct space is achieved. To raise or lower the lower yoke platen, proceed as follows:

a) Loosen the screws on the tie bar collars and raise them above the upper machine platen.

Caution: Never loosen the screws on the tie bar locking collars unless the reference standard or the hydraulic jack supports the entire weight of the moveable yoke.

b) Using the motorized adjusting switch, push the switch up/down to raise/lower the lower yoke platen.

Need picture or diagram

3.4 Prepare the Hand Pump for Use

Before connecting the hand pump assembly to the jack, check the supply of fluid in the pump reservoir by removing the fill plug (item 30 in Figure 25). The fill plug must be left open about two turns during operation to serve as a reservoir vent. If hydraulic fluid must be added, then be sure to use petroleum-based anti-wear hydraulic fluid with an ISO Viscosity Grade of 22 or 32. The following hydraulic fluids are recommended, but any equal hydraulic fluid may also be used:

Arco	Dutro AW 32
Conoco	Super Hydraulic 32
Drydene Oil Co	Paradene 22 AW
Exxon	.Nuto H 32
Gulf	Harmony 32 AW
Mobil	DTE 24
Texaco	Rando HD 32
Union	Unax AW 150

When choosing a hydraulic fluid, be certain it is equal to one of the above-listed recommendations. Many formulations may lack certain additives or are formulated for special reasons, such as lower cost, high detergency, leakage control, etc. Some of these fluids can be used successfully, however, others may prompt malfunctions and high rates of wear.

3.5 Prepare the Jack Assembly for Use

All hydraulic jack assemblies are furnished with a self-sealing hose coupling and are fully bled and checked at the factory prior to shipment. However, if the hand pump and hydraulic jack seem rather “spongy” during use, then there may be air in the system. If this occurs, then the system will need to be bled of the entrapped air. The procedure for bleeding the entrapped air is outlined in Section 6.2.

4. Operation

4.1 Operating Conditions

Calibration is best performed under the standard conditions recommended by the manufacturer of the unit under test. Precision instruments usually are calibrated in a location where the temperature is maintained within certain prescribed limits and where the reference standard and unit under test are not subject to sudden temperature changes. Therefore, it is recommended that the Universal Calibrating Machine be installed and used where such conditions prevail.

The calibrating machine is designed for the calibration of both tension-type and compression-type instruments. Figure 15 illustrates the suggested calibration setups for tension and compression.

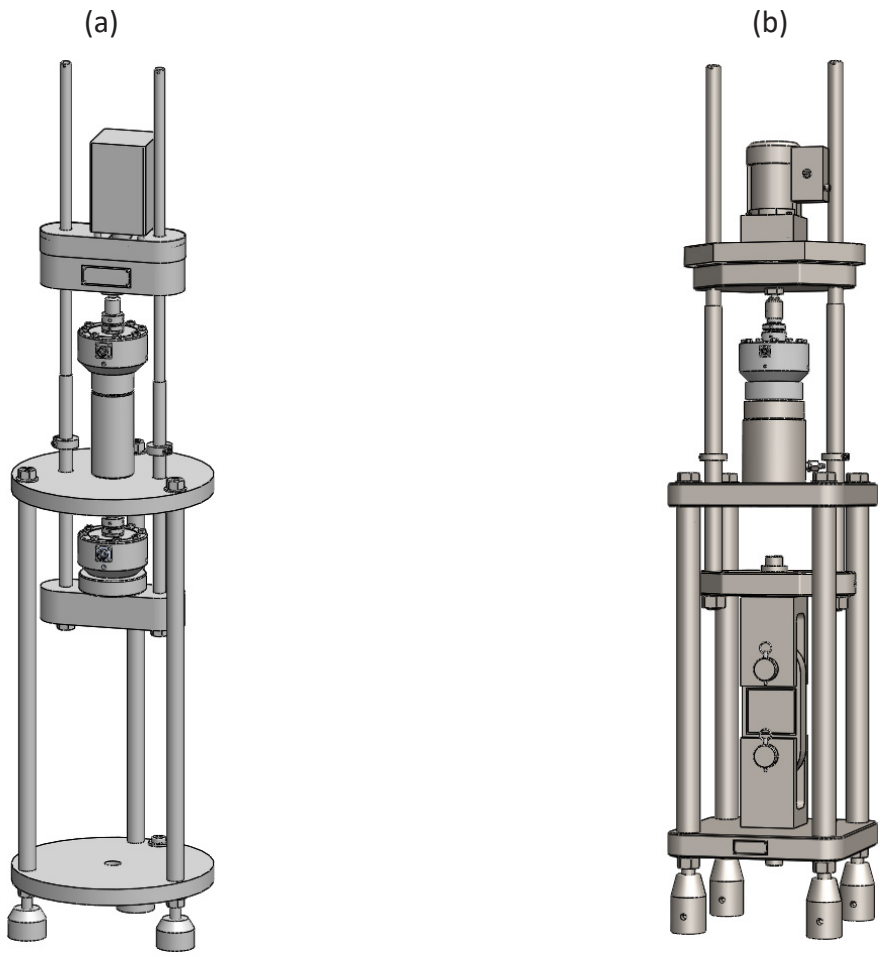

Figure 15: Calibrating Instruments in a) Compression; b) Tension

4.2 Compression Setup

To set up the Universal Calibrating Machine for compression calibration:
1. Position the reference standard, such as a Morehouse Load Cell or Morehouse Proving Ring. See pages 14-19 for more details.
2. Position the unit under test (see below).

Place the unit under test on the lower yoke platen. If the instrument has a tapped central hole in its base, it should be placed using an alignment plug to assure proper positioning of the unit under test. The alignment plug should be threaded far enough into the load cell to align, but not load on it.

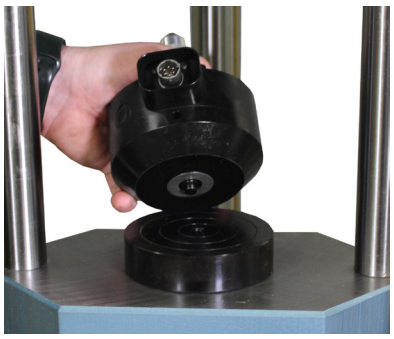

Figure 16: Unit Under Test with Alignment Plug

Check for clearance between the adapters used to load against the top of the unit under test and the underside of the upper machine platen. This clearance should be approximately 1/8 inch. If the clearance is greater than 1/8 inch, then raise the lower yoke platen as needed. Always check to be sure there is clearance between the unit under test, its adapters, and the upper machine platen.

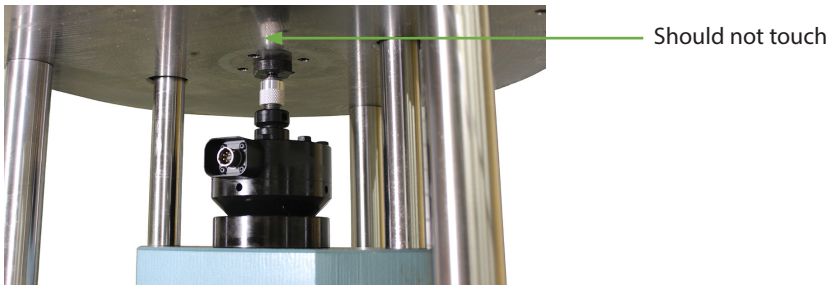

Figure 17: Unit Under Test Clearance

Caution: Never load the unit under test directly against the underside of the upper machine platen, which may result in high unit stress and damage the platen. Proper accessories, such as alignment bearing blocks or soft steel pads used with hardened steel bearing plates should be used to decrease the unit stress to safe levels.

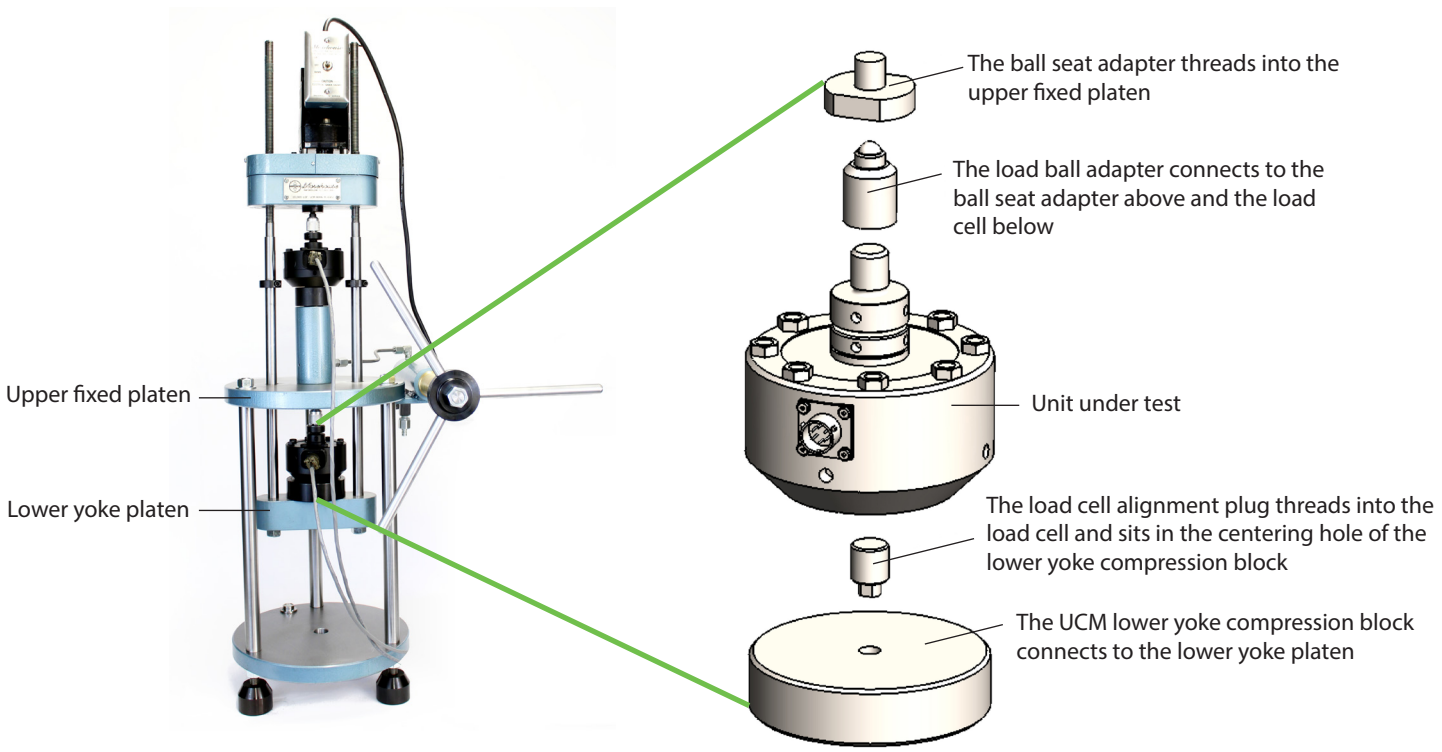

Figure 18: Setup for Compression Calibration

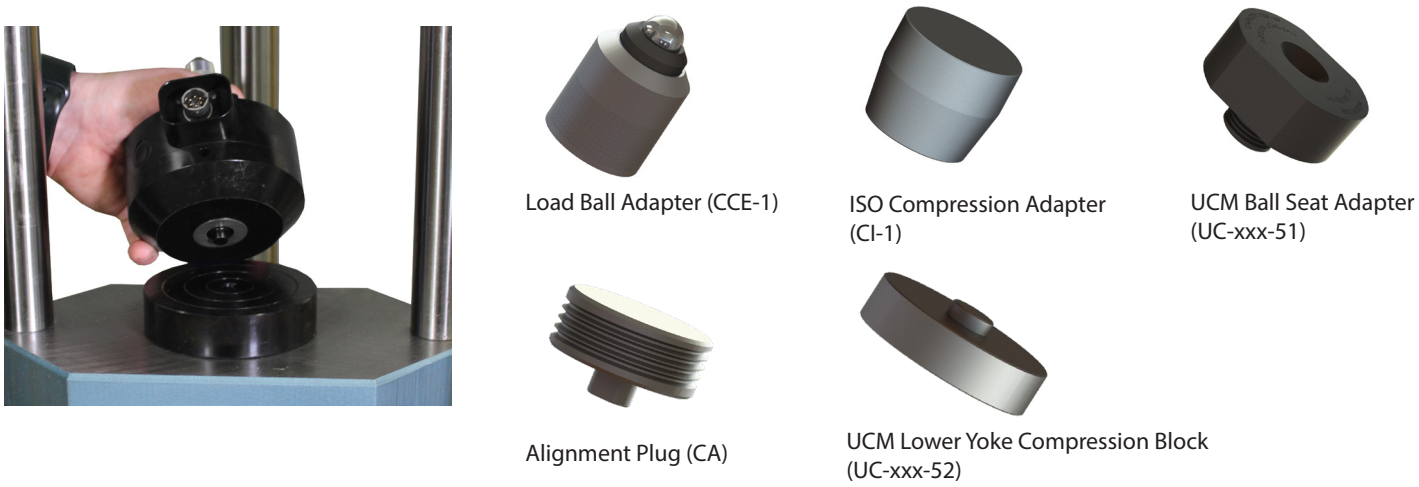

Figure 19: Adapters for the Unit Under Test

For more details see the Universal Calibrating Machine Adapters and Accessories PG-5202.

4.3 Tension Setup

Preparation for a tension calibration is similar to compression. The principle difference is the manner in which the unit under test is mounted in the machine. For a tension calibration, the unit under test is connected between the lower yoke platen and the lower machine platen by means of tension members (pulling rods).

Tension members supplied with the unit under test may suffice for this calibration. The Morehouse Quick-Change Tension Members can save time by making connections easier and more efficient. Faster testing and calibration turn-around can improve the bottom line of your operation. With this system, a set of self-aligning tension members are installed in the tension side of the Universal Calibrating Machine. Then, a pair of Tension Member Adapters, which are included in the kit can be used to quickly mount the unit under test into the machine and prepare for calibration. Figure 21 illustrates how various adapters can be used for different instruments with the same set of tension members.

Need to discuss extending the ram past 1 inch somewhere as that damages the ram.

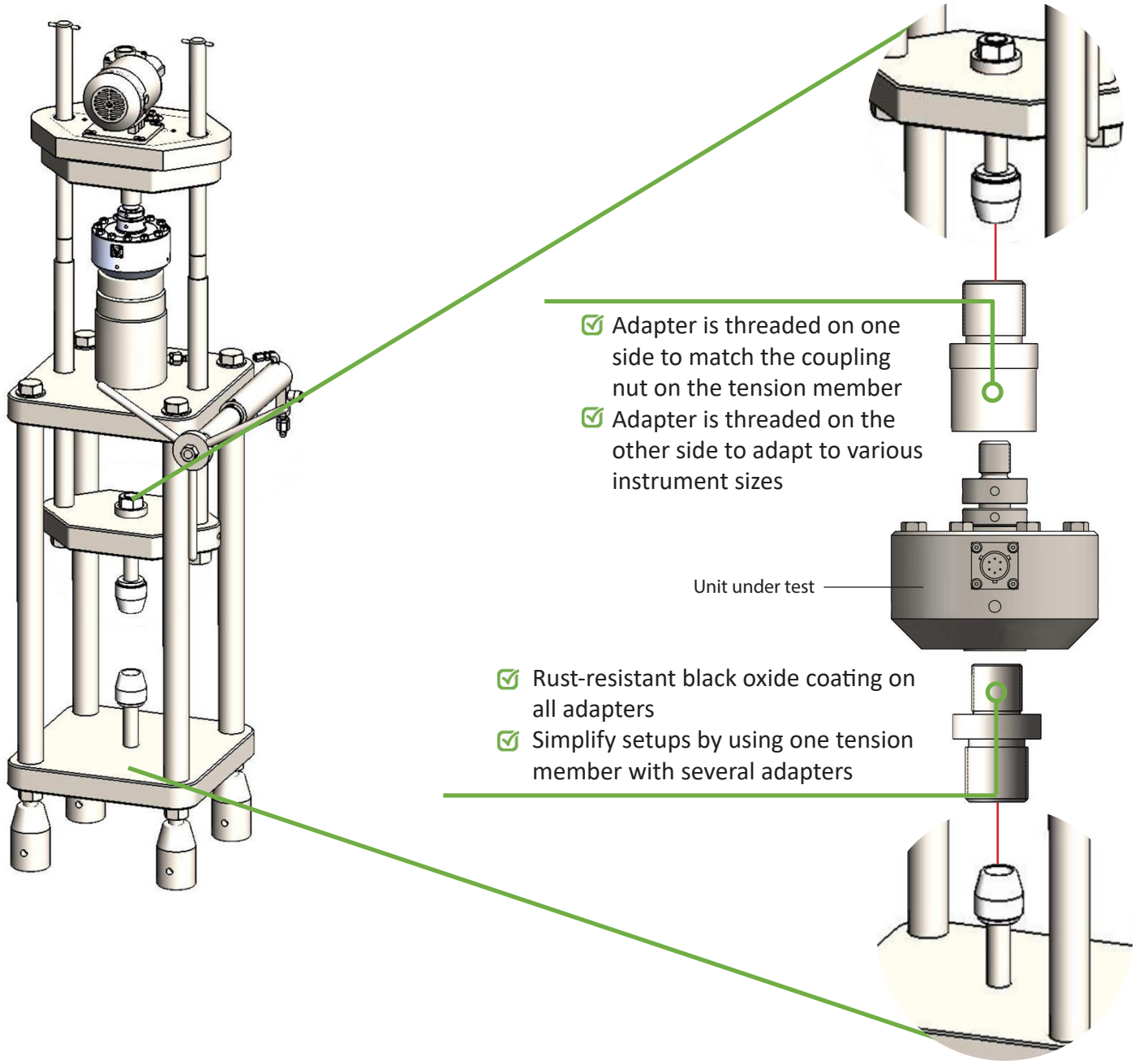

Figure 20: Tension Members with Adapters for UCMs 100,000 lbf (500 kN) Capacity and Less

For more details see the Universal Calibrating Machine Adapters and Accessories PG-5202.

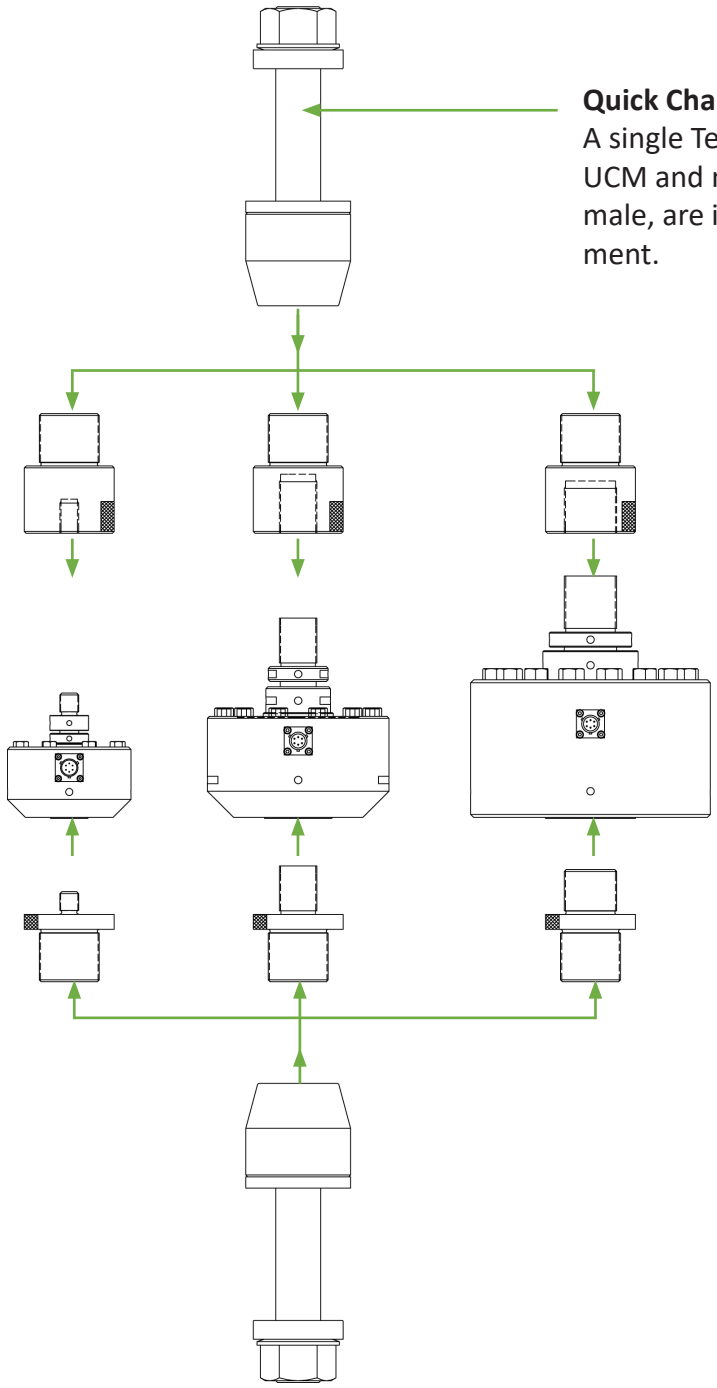

Quick Change Tension Member
A single Tension Member Assembly is installed into the UCM and multiple tension adapters, both male and female, are interchanged to attach the desired-size instrument.

A single pair of Tension Members can remain fixed in the machine and by swapping out both male and female tension adapters, three different load cell sizes can be calibrated in the UCM by user.

One end of the tension adapter always has the same size thread on it so that any adapter chosen will fit the master-size Tension Member Assembly.

Figure 21: Morehouse Quick Change Tension Members

For more details see the Universal Calibrating Machine Adapters and Accessories PG-5202.

Clevis Assembly for Tension Setup

Standard Morehouse Clevis assemblies are adaptable to the Quick-Change Tension Adapters system.

Figure 22: Morehouse Adaptable Clevit Kit

A clevis can be attached to a Tension Member in two possible ways based on the thread size on the clevises' mounting hole:
1. Using an intermediate Threaded Adapter to attach the clevis to the Coupling Nut
2. Attaching the Clevis directly to the Retaining Ring after removing the Coupling Nut from the Tension Member.

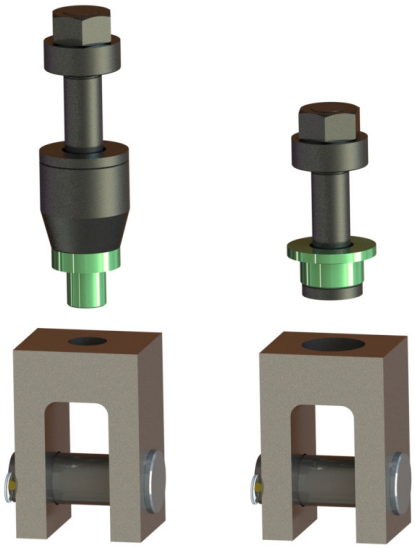

Figure 23: Morehouse Quick Change Tension Members and Clevis

For more details see the Quick Change Adapters for Tension Force Calibration PG-5901.

Figure 24 shows the method of connecting a tension member (B) between the unit under test (C) and the lower yoke platen (A). The unit under test is connected to the lower machine platen in a similar fashion.

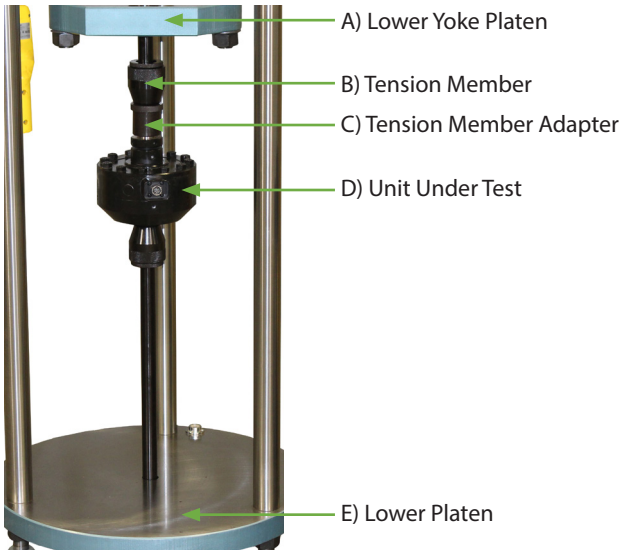

Figure 24: Tension Member Setup

Check for clearance between the tension member and the underside of the lower machine platen. This clearance should be approximately 1/8 inch. If it is greater than 1/8 inch, raise the lower yoke platen as needed. Always check to be sure there is clearance between the unit under test and its adapters and the lower machine platen.

Caution: Always be sure any fasteners supplied or used with tension members are fully engaged.

4.4 Hand Pump Operation

The hand pump supplied with the calibrating machine is a dual-volume design based on a double-diameter piston. On the side of the pump is a valve rod (Figure 5) with a round handle. With the rod pulled out, the full diameter of the piston is effective for large-volume, low-pressure pumping; with the rod pushed in, the reduced diameter is effective for high-pressure with a minimum pumping effort. To use the Hand Pump, refer to the operating instructions supplied with it (Hydraulic Hand Pump & Jack Instruction Manual).

Caution: Before pushing in the rod, release any downward pressure applied to the hand lever.

During pump operation, the fill plug on the upper right side of the pump body should be open about two turns to serve as a reservoir vent. The operation of the hand pump is entirely conventional. Operating the hand lever causes oil to be pumped from the reservoir to the outlets. When the relief valve is closed (handle rotated toward the hose connection on the pump body), pressure is developed within the pump. Opening this valve relieves the oil back to the reservoir. When operating the relief valve, use modest pressure on the handle.

The fine adjustment vernier piston is a small-displacement precision piston. After pressure has been built up by means of the hand lever to obtain the approximate force desired, rotate the hand wheel to operate the vernier piston and maintain a precise force. We recommend that the vernier piston adjustment be kept at its mid-position of travel to allow small increments of force to be increased or decreased. Experience will dictate the best position for individual requirements. A little practice in the use of this pump will enable extremely precise force application by means of the pump and jack.

If the hand pump and hydraulic jack seem rather “spongy” during use, there may be air in the system. If this occurs the system will need to be bled of the entrapped air. The procedure for bleeding the entrapped air is outlined in section 6.2.

Caution: Do not attempt to exceed the 1-inch stroke of the ram in the jack cylinder. Considerable damage may result if pressure is applied after the ram has reached its limit of travel.

4.5 Universal Hydraulic Pump

The Universal Hydraulic Pump (Figure 6) is an electric motor-driven pump for use with calibrating machines with capacities of 60,000 lbf (250 kN) and higher. It comes standard with all machines 100,000 lbf (500 kN) and higher. It replaces the hand pump, thus eliminating the effort required to operate the hand pump. To use the Universal Hydraulic Pump refer to the operating instructions supplied with it (Universal Hydraulic Pump Instruction Manual).

Caution: Before use, check the hose and fittings for any potential leaks and ensure 1 reservoir screw is loosened to vent the system.

4.6 Calibration

Once the reference standard and the unit under test have been installed into the UCM and the operator is proficient in the use of the hand pump, calibration of the unit under test can be performed.

Caution: Calibration of a unit under test should not be attempted until the personnel concerned are completely familiar with the operation of the reference standard and the unit under test.

Detailed procedures for calibrating the various types of instruments are beyond the scope of this manual. In general, such calibration consists of applying a series of forces to the calibration system (by means of the hand pump and jack assemblies) and comparing the indication of the reference standard with that of the unit under test.

Caution: When applying forces, always monitor the force applied by the reference standard. Never depend on the indicated value of the unit under test to determine the applied force unless the accuracy of the unit under test has been verified. There may be a significant error in the unit under test, which could cause the reference standard and the calibrating machine to be overloaded and damaged.

To apply a load to the reference system, open the reservoir vent and close the relief valve on the hand pump. Apply the load to the test setup by working the pump handle until the desired load is almost reached.

Note: The tension tie bars should not touch the sides of the holes in the upper machine platen, as the resulting friction would reduce the accuracy of calibration. If necessary, move the locking collars up the tie bars so that clearance between them and the upper machine platen can be observed.

Complete the loading to the exact force required by using the auxiliary screw piston (hand wheel). Read and record the force indication of the reference standard and the unit under test. Repeat the procedure at as many loading points as necessary to complete the calibration. To apply forces in descending increments, open the relief valve slightly to achieve the approximate load desired, and make fine adjustments as necessary by means of the auxiliary screw piston.

4.7 Tare Weight

All instruments have different characteristics that may or may not require correction for the tare weight. The tare weight is a “pre-load” on the reference standard. It is attributable to the weight of the moveable yoke, test instrument, bearing plate(s), load ball(s), and adapter fittings.

Some load cells can withstand an overload of up to 150 % or more of rated capacity without damaging the load cell, and others only 110 %. When evaluating an additional error due to tare, one would need to compare the same force point with a tare load versus without.

In cases where the “pre-load” is over 5 % of the capacity of the load cell, ignoring the tare load effect may introduce a significant error in the calibration. The error introduced can be determined by comparing two calculations.

First, calculate the load applied to the test instrument by treating the deflection of the calibration standard with the tare load applied as the “no-load” reading.

Next, calculate by taking into account the tare load. The tare load can be ascertained by weighing the items (yoke, test instrument, etc.) on a suitable platform scale. However, it may be more convenient to determine the tare load using a reference standard. The tare weight will have to be raised off of the load cell, and the Indicator should be zeroed. Then the weight can be lowered, and the weight can be calculated.

Comparing the results of these two calculations will readily show the error introduced. Once the weight is calculated, the user can test to determine an additional error.

Unlike several load cells, proving rings do require a correction for tare. This is due to the inherent non-linearity of the rings. For analog proving rings, the position of the dial on the micrometer can be an additional error source.

Below is an example of a formula used to correct tare loads. The formula corrects for tare and is applied to the value of the applied load from the fitted curve data provided with your calibration report.
The tare load correction formula is represented as follows: $TCF = ((2 * A2) * L * T)) – A0$

Where:
A2 = The value of the A2 constant found on the ring calibration report
L = The force value applied
T = The force value of the tare applied
A0 = The value of the constant found on the ring calibration report

Tare weight of less than 2 % is likely insignificant regarding the overall measurement uncertainty.

When the tare weight exceeds more than 2 % of the rated capacity of a load cell or proving ring, we urge more testing to capture error sources. If the tare weight is higher than 5 %, we recommend calibrating the device to 105 to 110 % of the rated capacity to account for any of these errors. Correction formulas must be used for proving rings to obtain the correct deflection values.

5. Service, Inspection, Maintenance, & Lubrication

5.1 Tools

Only those tools normally available in a repair shop are needed for inspection and maintenance of the Universal Calibrating Machine.

5.2 Service Inspection

Perform a routine service inspection of the calibrating machine at regular intervals. The frequency of inspection depends on how often and under what circumstances the machine is used. During this inspection, check the equipment for rust, leaking hydraulic fluid, and other visible signs of deterioration or damage. In addition, check the oil level in the pump reservoir, and examine the O-ring seals. Replace any O-ring that is split, cut, or otherwise damaged. After an extended period of heavy service, it is recommended to disassemble and clean the pump. Cleaning the pump consists of washing or blowing out the body, casting, and washing the parts. Refer to section 6 for disassembly instructions.

5.3 Maintenance

Routine maintenance of the machine usually is limited to replacing O-ring seals in the pump assembly, adding hydraulic fluid (as recommended in section 3) if required, removing rust, dirt, and corrosion from all assemblies, touching up paint damage, tightening any nuts or set screws which have loosened, and re-leveling the machine, if required.

The numbers in parentheses in this section refer to items in Figure 25. If the pump and jack assembly fail to develop or hold pressure, corrective maintenance may be necessary. If the hand lever is operated and the pump fails to develop pressure, be sure the relief valve is closed and there is sufficient fluid in the reservoir. If failure continues, one or both check valves (33 and 38) may leak. Replace both O-rings to be sure.

If the pump builds up pressure but the pressure drops, examine all joints for leakage. A very small amount of leakage will result in a considerable loss of pressure. As the pressure drops, watch the hand lever. If it rises, the discharge check valve (33) is leaking. Replace the O-ring (29). If the hand lever does not rise as the pressure drops, then the relief valve is leaking. A foreign particle may be lodged on the seat. However, it is more likely that the O-ring (39) has failed and must be replaced. The outlet in the pump body is tapped with 9/16”-18 NF threads and SAE ORB-6 (15). A firm joint will prevent leakage. If leakage develops, do not tighten the fitting excessively. Replace the O-ring seal.

Need to check the rest of the document.

Caution: Do not screw pipe threads directly into the pump body outlet. A special Adapter (53) is provided with pipe threads for making connections.

5.4 Lubrication

Caution: If you jog the chain with the guard removed, keep your fingers away from the chain. https://bit.ly/3pAJM3T

Routine lubrication consists of applying grease to the chain drive on the upper-yoke platen and any grease fittings, and adding oil to the motor-drive gearbox, if necessary. A small amount of grease should be applied to the tension tie bars directly above the upper yoke platen. After applying the grease, move the upper yoke platen to its highest and lowest position to distribute the grease over the threads of the tension tie bars. Also, check the calibrating machine for grease fittings on the upper yoke platen and apply grease to these fittings. The grease used should conform to NGLI 2 specifications.

UCM's above 300,000 lbf (1 500 kN) capacity utilizes a gearbox that requires maintenance. Please refer to the manufacturer's guidelines for the applicable gearbox used on your machine.

The standard Bodine motors and gear reducers are lubricated by the manufacturer for the service life of the motor. Lubrication by the user is not required. However, the Boston gear reducers sometimes used with these calibrating machines do require lubrication. In general, for Boston gear reducers, the vent filler is at the uppermost plug position, and the drain plug is at the lowermost position. The oil level should be maintained at the centerline of the uppermost gear.

5.5 Rust Prevention

On completion of routine inspection and preventative maintenance procedures, coat all unpainted metal surfaces with some light machine oil.

6. Disassembly, Repair, and Reassembly

6.1 Disassembly and Reassembly

The drawings provided clearly show procedures for disassembly and reassembly of the Morehouse Universal Calibrating Machine. The parts list and drawing for the hand pump are included in this manual. Parts lists and drawings for Universal Calibrating Machines and hydraulic jacks are supplied with the calibrating machine. This section includes recommendations regarding the disassembly and reassembly of the hand pump. All numbers in parentheses refer to items in Figure 25.

6.2 Air Bleed Procedure for Hydraulic Jack

If the hand pump and hydraulic jack seem rather “spongy” during use, there may be air in the system. If this occurs, bleed the system of the entrapped air.

a) Check the supply of fluid in the pump reservoir by removing the fill plug (30). The fill plug must be left open about two turns during operation to serve as a reservoir vent. If hydraulic fluid must be added be sure to use petroleum-based anti-wear hydraulic fluid with an ISO Viscosity Grade of 22 or 32 as recommended in Section 3.

b) To bleed the jack, lower the ram to its full return position. Loosen the air bleed screw for about 2 turns. Slowly pump fluid to the jack, bubbles should be seen at the screw. Do not pump to fast as to extend the jack.

c) When the bubbles stop and a steady flow of fluid is observed, tighten the air bleed screw. There may be small bubbles remaining in the jack. They may be removed by extending and retracting the jack, without over-extension, 3 or 4 times and repeating the bleed procedure. Removing all air is extremely difficult, but through the use of the machine or loading near capacity and letting it sit for an hour or so, it will work its way out.

d) After the jack has been bled of all entrapped air, tighten the air bleed securely.

6.3 Service Instructions for Hydraulic Hand Pump

When changing O-rings, always lubricate the O-rings and all contacting metal parts before attempting assembly. For a lubricant, use the same fluid as will be used in the system. The high-pressure valve and retaining parts are held in place by the retaining plug (57). To reassemble, screw the retaining plug (57) into the body until all parts are solid, then back it off about two turns. This provides sufficient travel for the poppet.

The valve rod (41) is held in place by three parts (25, 26, and 27) that must be removed to enable disassembly of the valve rod. Access to these three parts is gained by removing the reservoir (2). Drain the hydraulic fluid before removing the reservoir. The piston and hand lever can be removed as an assembly. Unscrew the cylinder retaining plug (16), disconnect from the clevis (19), and pull straight up. At the end of the pressure stroke, the piston should bottom on the body plate (50) before the lever hits the cylinder retaining plug (16). If it does not, or more finger room between the hand lever and reservoir is desired, loosen the piston pin (7), insert a small rod in the cross hole provided in the piston, and back of the piston, which is threaded into the piston pin (17) as needed. Re-tighten the setscrew (7).

The cylinder pump (18) must be removed and reassembled from the top. If it is not, the O-ring will be cut by the angular, intersecting body casting bore. To remove the cylinder, detach the body plate (50) and push the cylinder from the bottom. On reassembly, lubricate the O-rings and try to rotate the cylinder, as inserted, to avoid cutting or pinching the O-rings. A tapered piece of wood is helpful in rotating the cylinders.

The precision pressure adjustment mechanism can be unscrewed from the pump body as a unit. The star wheel (21), star wheel pin (22), piston cap (23), and piston (24) make up a sub-assembly, which is removed from the pump body by unscrewing the piston body (24). Note that the star wheel (21) is attached to the Vernier piston (58) by means of a pin (22).

6.4 Repair

All parts of the calibrating machine, except O-rings, are designed to last indefinitely in normal use. If inadvertent misuse or accidental damage occurs, the damaged parts may be replaced to repair the machine.

6.5 Drawings & Parts Lists

Figure 25 and the associated parts list, illustrate replacement parts available for the standard hand pump commonly supplied with Morehouse Universal Calibrating Machines. Drawings and parts lists for specific capacity calibrating machines and hydraulic jacks are supplied separately. If copies of drawings and parts lists of a specific capacity calibrating machine or hydraulic jack are required, contact Morehouse to request the the appropriate drawings. When ordering repair parts, please include the serial number and capacity of the calibrating machine (as engraved on the nameplate) and state the part number, name, and quantity required. To order parts, contact info@mhforce.com.

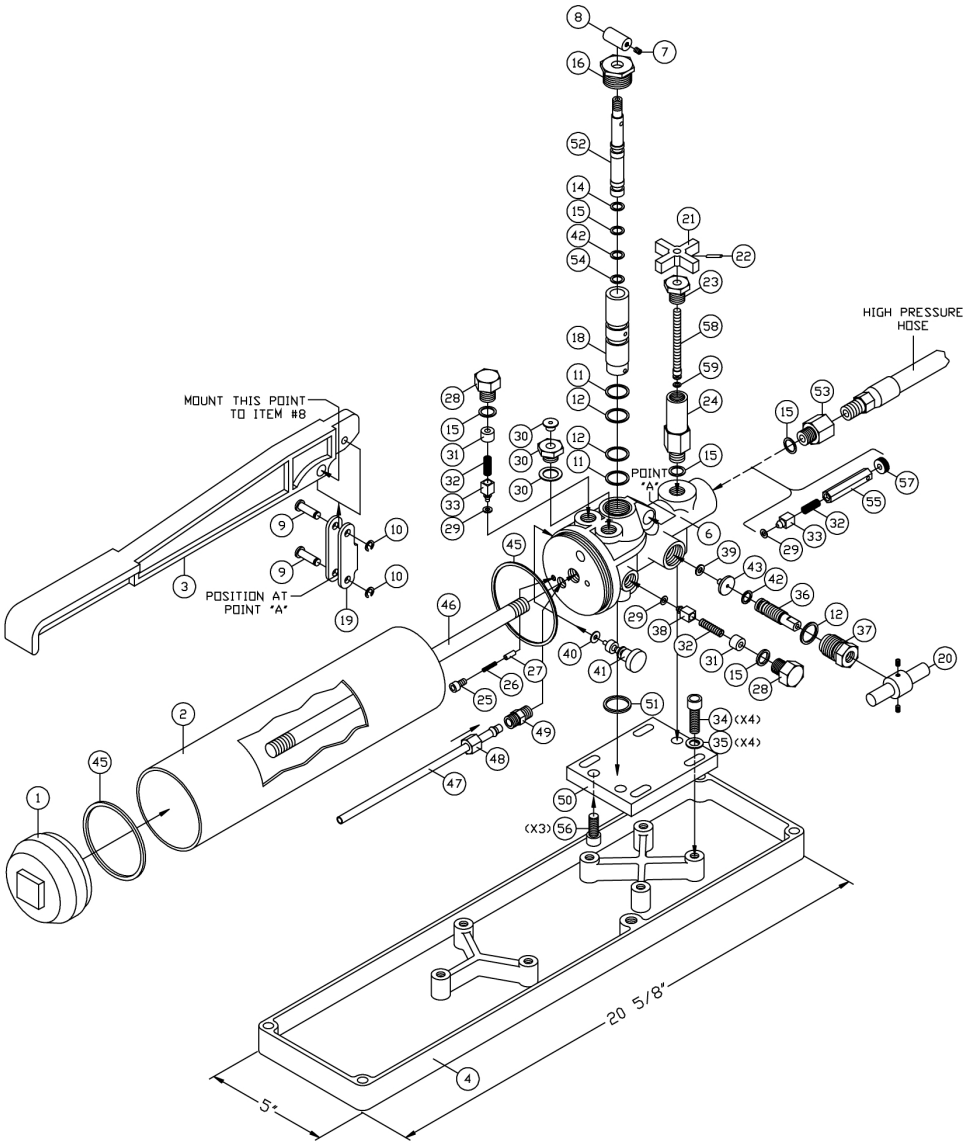

Figure 25: Hand Pump Assembly (Drawing 214000A-01)

Table 2: Parts List for Hand Pump (1-38) - Refer to Figure 25

Item	Part No.	Nomenclature	Quantity
1	T-575	Reservoir Cap	1
2	T-421	Reservoir Tube	1
3	T-165	Pump Handle	1
4	T-118	Drip Pan	1
6	T-402	Pump Body	1
7	T-160	Piston Pin Screw	1
8	T-161	Piston Pin Shoe	1
9	T-142	Clevis Pin	2
10	T-144	Cotter Hair Pin	2
11	10-90020	Cylinder Back-Up Ring (T-112)	2
12	10-90013	O-Ring (T-153)	3
14	10-90019	Piston Back-Up Ring (T-158)	1
15	10-90027	O-Ring	5
16	T-108	Cylinder Retaining Plug	1
17	T-145	Piston Pin	1
18	T-236	Cylinder Pump	1
19	T-143	Clevis	1
20	T-773	Relief Valve Handle	1
21	P-17-33	Star Wheel	1
22	P-17-32	Star Wheel Pin	1
23	1GT-33	Piston Cap	1
24	1GT-32	Piston Body	1
25	T-405	Screw	1
26	T-116	Valve Rod Spring	1
27	T-133	Valve Rod Detent Pin	1
28	T-117	Pump Body Plug	2
29	10-90001	O-Ring (T-152)	3
30	IGT-302	Fill & Vent Plug	1
31	T-127	Check Valve Spacer	2
32	CV-1-5	Check Valve Spring	3
33	T-147	High Pressure Valve Poppet	2
34	T-406	Drip Pan Attaching Screw	4
35	T-167	Drip Pan Attaching Washer	4
36	T-110	Relief Valve Stem	1
37	T-109	Relief Valve Body	1
38	T-194	Poppet Valve	1

Table 2: Parts List for Hand Pump (39-59) - Refer to Figure 25

Item	Part No.	Nomenclature	Quantity
39	10-90002	Relief Valve O-Ring (T-175)	1
40	10-90004	Valve Rod O-Ring (T-155)	1
41	T-115	Valve Rod	1
42	10-90005	O-Ring (T-151)	2
43	T-111	Relief Valve Seat	1
45	10-90010	Reservoir O-Ring (T-156)	2
46	T-130	Reservoir Stud	1
47	P-17-29	Inlet Tube	1
48	P-17-7	Inlet Tube Fitting	1
49	T-250	Inlet Tube Nipple	1
50	T-408	Body Plate	1
51	10-90012	Cylinder O-Ring (T-164)	1
52	T-106	Piston	1
53	CV2SS2	Special Adapter	1
54	10-90018	Piston Back-Up Ring (T-159)	1
55	T-107	Guide Rod	1
56	01-90003	Body Attaching Screw	3
57	IGT-10	Retaining Plug	1
58	IGT-34	Vernier Piston	1
59	10-90000	Seal Ring Piston	1

7. Accessories & Adapters for use with Morehouse Universal Calibrating Machines

Due to the physical differences in the many types of instruments that may be calibrated in the Morehouse Universal Calibrating Machine, many different types of accessories and adapters are available. For more information, see Universal Calibrating Machine Adapters and Accessories PG-5202.

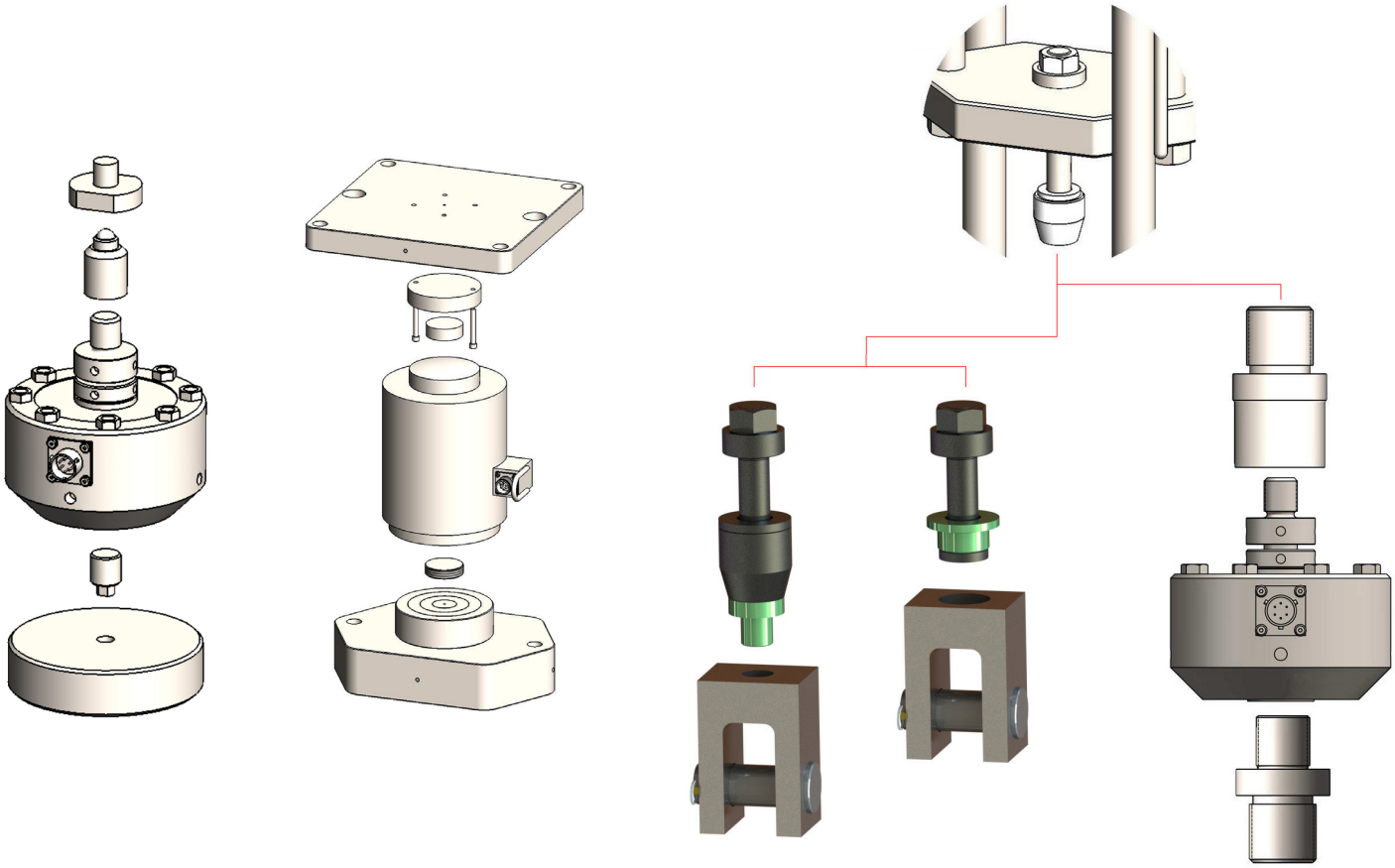

Figure 26: Adapters for the Universal Calibrating Machine

WARNING: Morehouse Instrument Company products are precision instruments for specific force or torque calibration applications. Improper use, exceeding stated capacities, or unauthorized modifications can result in severe injury, death, machine damage, and warranty voiding. Always ensure proper installation, alignment, and use within specified limits. Do not use damaged or visibly compromised components. Refer to your product manual for proper use and specifications. If you have questions about a Morehouse Instrument Company product's capabilities or limitations or to access a manual, please contact your sales representative or email info@mhforce.com.

Dansk

ADVARSEL: Morehouse Instrument Company produkter er præcisionsinstrumenter til specifikke kraft- eller momentkalibreringsapplikationer. Forkert brug, overskridelse af angivne kapaciteter eller uautoriserede ændringer kan resultere i alvorlig personskade, død, maskinskade og bortfald af garanti. Sørg altid for korrekt installation, justering og brug inden for specificerede grænser. Brug ikke beskadigede eller synligt defekte komponenter. Se din produktmanual for korrekt brug og specifikationer. Hvis du har spørgsmål om et Morehouse Instrument Company-produkts egenskaber eller begrænsninger, eller for at få adgang til en manual, bedes du kontakte din salgsrepræsentant eller sende en e-mail til info@mhforce.com.

Nederlands

WAARSCHUWING: Morehouse Instrument Company producten zijn precisie-instrumenten voor specifieke kracht- of koppelkalibratietoepassingen. Onjuist gebruik, het overschrijden van de vermelde capaciteiten of ongeautoriseerde wijzigingen kunnen leiden tot ernstig letsel, overlijden, schade aan de machine en het vervallen van de garantie. Zorg altijd voor een correcte installatie, uitlijning en gebruik binnen de gespecificeerde grenzen. Gebruik geen beschadigde of zichtbaar aangetaste onderdelen. Raadpleeg uw producthandleiding voor correct gebruik en specificaties. Als u vragen heeft over de mogelijkheden of beperkingen van een Morehouse Instrument Company product, of om toegang te krijgen tot een handleiding, neem dan contact op met uw verkoopvertegenwoordiger of stuur een e-mail naar info@mhforce.com.

Vlaams

WAARSCHUWING: Morehouse Instrument Company producten zijn precisie-instrumenten voor specifieke kracht- of koppelkalibratietoepassingen. Onjuist gebruik, het overschrijden van de vermelde capaciteiten of ongeautoriseerde wijzigingen kunnen leiden tot ernstig letsel, overlijden, schade aan de machine en het vervallen van de garantie. Zorg altijd voor een correcte installatie, uitlijning en gebruik binnen de gespecificeerde grenzen. Gebruik geen beschadigde of zichtbaar aangetaste onderdelen. Raadpleeg uw producthandleiding voor correct gebruik en specificaties. Als u vragen heeft over de mogelijkheden of beperkingen van een Morehouse Instrument Company product, of om toegang te krijgen tot een handleiding, neem dan contact op met uw verkoopvertegenwoordiger of stuur een e-mail naar info@mhforce.com.

Français

AVERTISSEMENT: Les produits Morehouse Instrument Company sont des instruments de précision destinés à des applications spécifiques d'étalonnage de force ou de couple. Une utilisation incorrecte, un dépassement des capacités indiquées ou des modifications non autorisées peuvent entraîner des blessures graves, la mort, des dommages à la machine et l'annulation de la garantie. Veillez toujours à une installation, un alignement et une utilisation corrects dans les limites spécifiées. N'utilisez pas de composants endommagés ou visiblement compromis. Reportez-vous au manuel de votre produit pour une utilisation correcte et les spécifications. Si vous avez des questions sur les capacités ou les limites d'un produit Morehouse Instrument Company, ou pour accéder à un manuel, veuillez contacter votre représentant commercial ou envoyer un courriel à info@mhforce.com

Deutsch

WARNUNG: Produkte der Morehouse Instrument Company sind Präzisionsinstrumente für spezifische Kraft- oder Drehmomentkalibrierungsanwendungen. Unsachgemäßer Gebrauch, Überschreitung der angegebenen Kapazitäten oder unbefugte Änderungen können zu schweren Verletzungen, Tod, Maschinenschäden und zum Erlöschen der Garantie führen. Stellen Sie stets eine korrekte Installation, Ausrichtung und Verwendung innerhalb der angegebenen Grenzen sicher. Verwenden Sie keine beschädigten oder sichtbar beeinträchtigten Komponenten. Beachten Sie Ihr Produkthandbuch für die korrekte Verwendung und Spezifikationen. Wenn Sie Fragen zu den Fähigkeiten oder Einschränkungen eines Produkts der Morehouse Instrument Company haben oder um auf ein Handbuch zuzugreifen, wenden Sie sich bitte an Ihren Vertriebsmitarbeiter oder senden Sie eine E-Mail an info@mhforce.com.

Italiano

AVVERTENZA: I prodotti Morehouse Instrument Company sono strumenti di precisione per applicazioni specifiche di calibrazione della forza o della coppia. L'uso improprio, il superamento delle capacità dichiarate o le modifiche non autorizzate possono provocare gravi lesioni, morte, danni alle macchine e l'annullamento della garanzia. Assicurarsi sempre di una corretta installazione, allineamento e utilizzo entro i limiti specificati. Non utilizzare componenti danneggiati o visibilmente compromessi. Fare riferimento al manuale del prodotto per l'uso corretto e le specifiche. In caso di domande sulle capacità o sui limiti di un prodotto Morehouse Instrument Company, o per accedere a un manuale, contattare il proprio rappresentante di vendita o inviare un'e-mail a info@mhforce.com.

Norsk

ADVARSEL: Morehouse Instrument Company-produkter er presisjonsinstrumenter for spesifikke kraft- eller momentkalibreringsapplikasjoner. Feil bruk, overskridelse av oppgitte kapasiteter eller uautoriserte modifikasjoner kan føre til alvorlig personskade, død, maskinskade og bortfall av garanti. Sørg alltid for riktig installasjon, justering og bruk innenfor angitte grenser. Ikke bruk skadede eller synlig defekte komponenter. Se produktets bruksanvisning for riktig bruk og spesifikasjoner. Hvis du har spørsmål om et Morehouse Instrument Company-produkts egenskaper eller begrensninger, eller for å få tilgang til en manual, vennligst kontakt din salgsrepresentant eller send en e-post til info@mhforce.com.

Português

AVISO: Os produtos da Morehouse Instrument Company são instrumentos de precisão para aplicações específicas de calibração de força ou torque. O uso inadequado, a superação das capacidades declaradas ou modificações não autorizadas podem resultar em ferimentos graves, morte, danos à máquina e anulação da garantia. Certifique-se sempre da instalação, alinhamento e uso corretos dentro dos limites especificados. Não use componentes danificados ou visivelmente comprometidos. Consulte o manual do seu produto para uso e especificações adequados. Se você tiver dúvidas sobre os recursos ou limitações de um produto da Morehouse Instrument Company, ou para acessar um manual, entre em contato com seu representante de vendas ou envie um e-mail para info@mhforce.com.

Español

ADVERTENCIA: Los productos de Morehouse Instrument Company son instrumentos de precisión para aplicaciones específicas de calibración de fuerza o par. El uso inadecuado, la superación de las capacidades indicadas o las modificaciones no autorizadas pueden provocar lesiones graves, la muerte, daños en la máquina y la anulación de la garantía. Asegúrese siempre de que la instalación, la alineación y el uso sean correctos dentro de los límites especificados. No utilice componentes dañados o visiblemente comprometidos. Consulte el manual de su producto para conocer el uso y las especificaciones correctas. Si tiene preguntas sobre las capacidades o limitaciones de un producto de Morehouse Instrument Company, o para acceder a un manual, póngase en contacto con su representante de ventas o envíe un correo electrónico a info@mhforce.com.

Svenska

VARNING: Morehouse Instrument Companys produkter är precisionsinstrument för specifika kraft- eller vridmomentkalibreringsapplikationer. Felaktig användning, överskridande av angivna kapaciteter eller obehöriga modifieringar kan leda till allvarliga personskador, dödsfall, maskinskador och upphävande av garantin. Se alltid till att installationen, inriktningen och användningen är korrekt inom angivna gränser. Använd inte skadade eller synligt komprometterade komponenter. Se din produkthandbok för korrekt användning och specifikationer. Om du har frågor om ett Morehouse Instrument Company- produkts kapacitet eller begränsningar, eller för att komma åt en manual, vänligen kontakta din säljrepresentant eller e-posta info@mhforce.com.